3541 / 3542

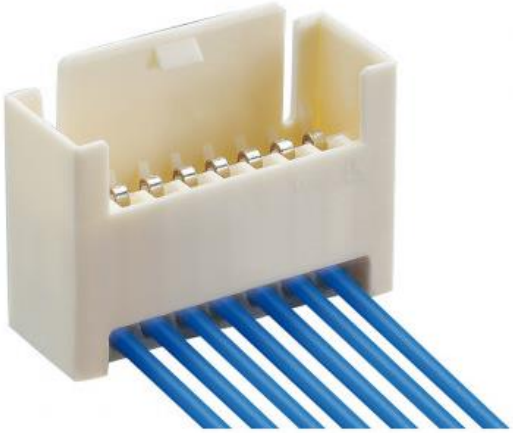

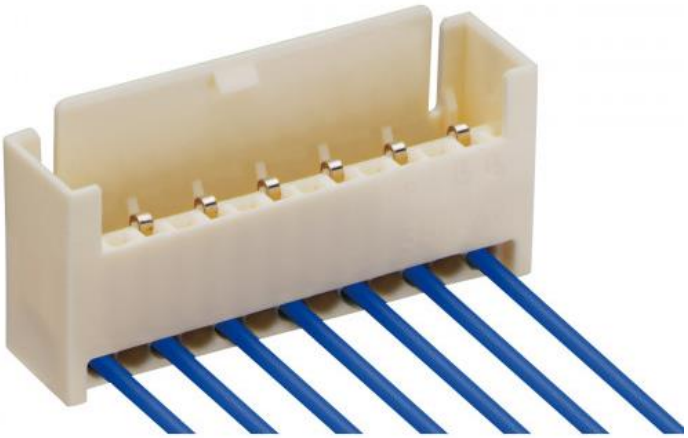

3545 / 3546

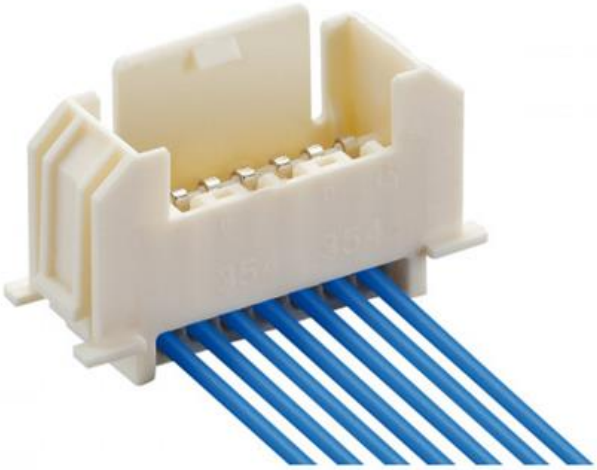

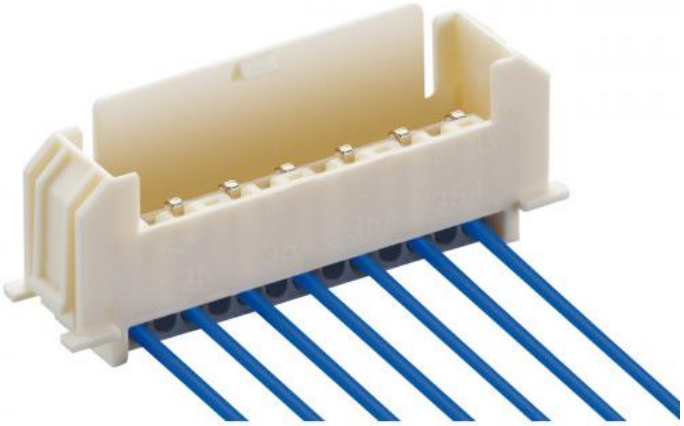

Alteration Description

Edition	Alterations carried out
1	Change of name and inspection node added.
2	New template added, graphics updated, Updated point 3 Processing tools and machines, added point 8 Storage

Contents:

1. Product description

Pin header / chassis pin header in insulation displacement technique (IDT) with locking Latch.

1.1 Product types

Pin header 3541

Pitch 2,5 mm
acc. to data sheet 3541 01

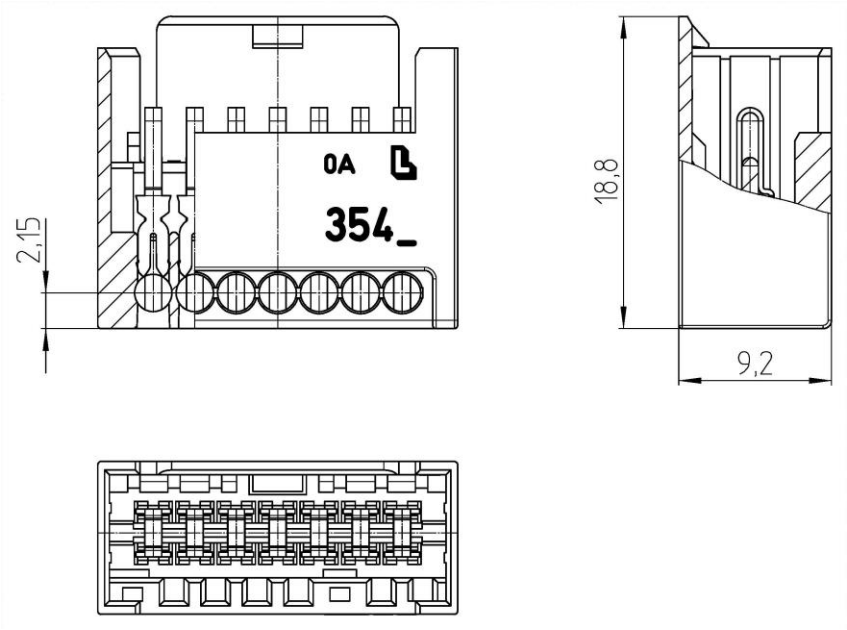

Pin header 3542

Pitch 5,0 mm
acc. to data sheet 3542 01

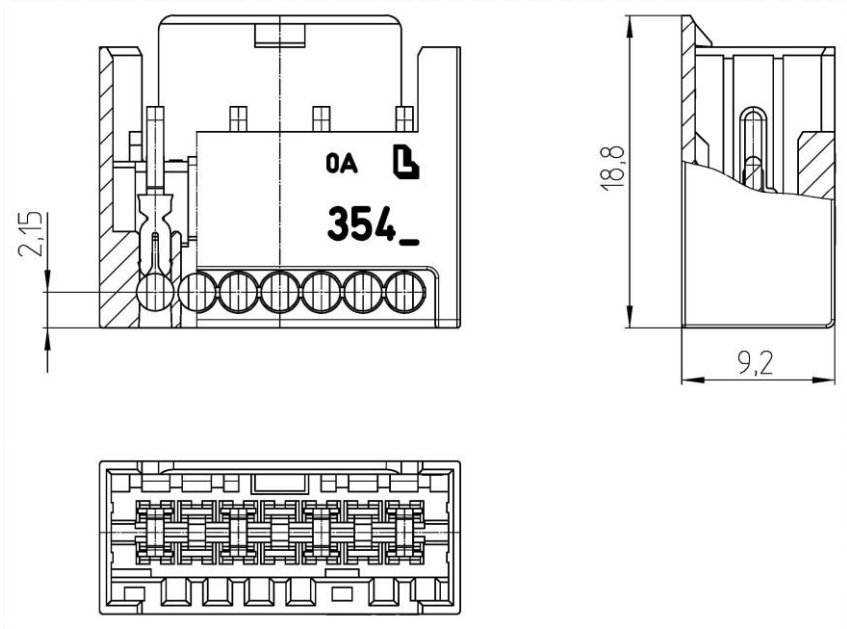

Chassis pin header 3545

Pitch 2,5 mm
acc. to data sheet 3545 01

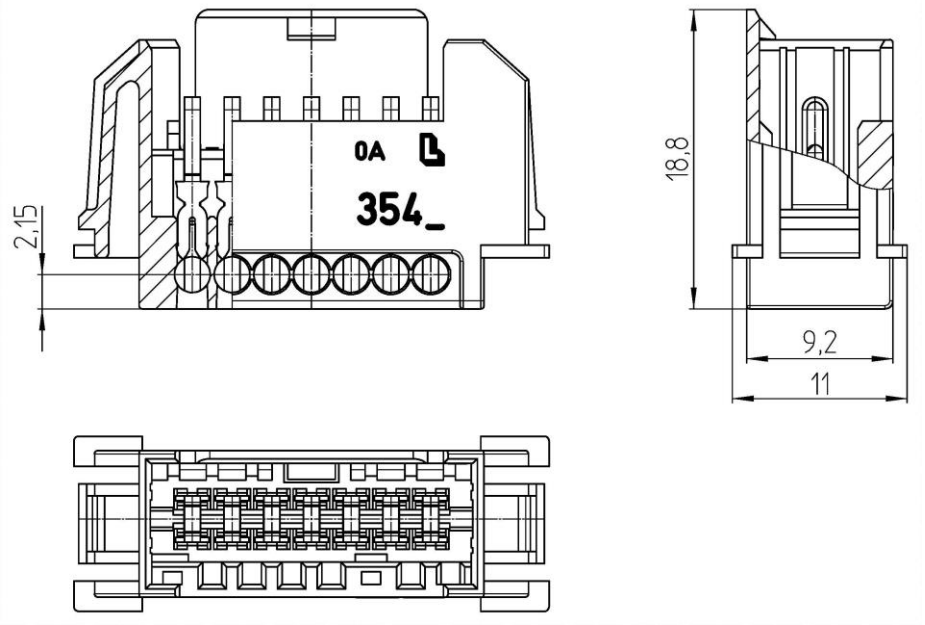

Chassis pin header 3546

Pitch 5,0 mm
acc. to data sheet 3546 01

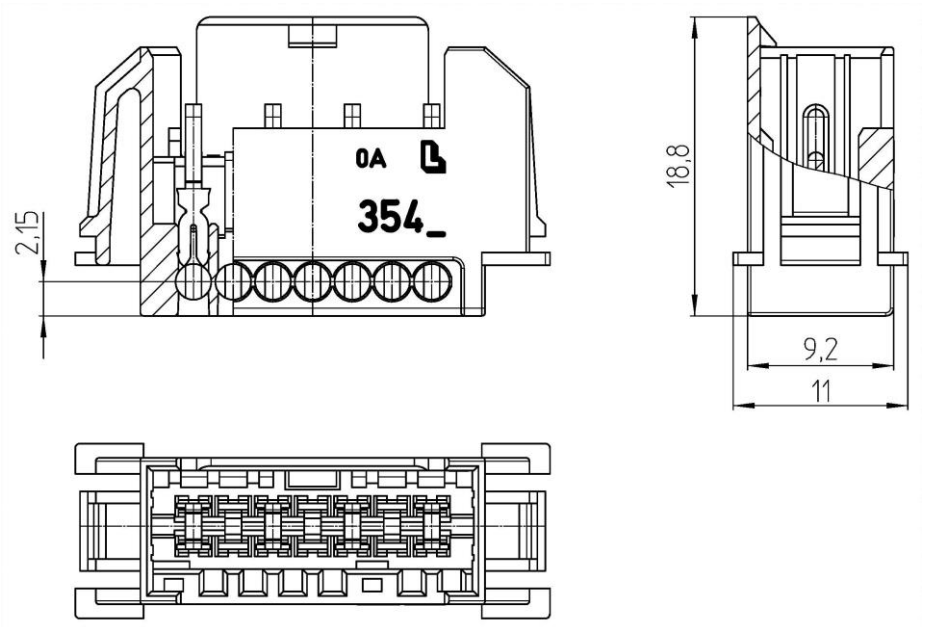

1.2 System features

One-piece body
Delivered in bar stock carries

Wire termination

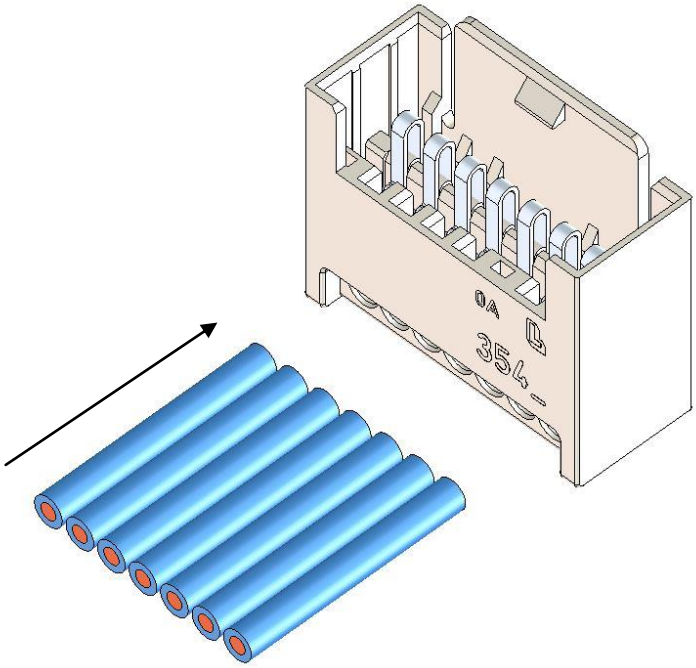

Insulation displacement connection by pressing the contacts
Wire exit 90°

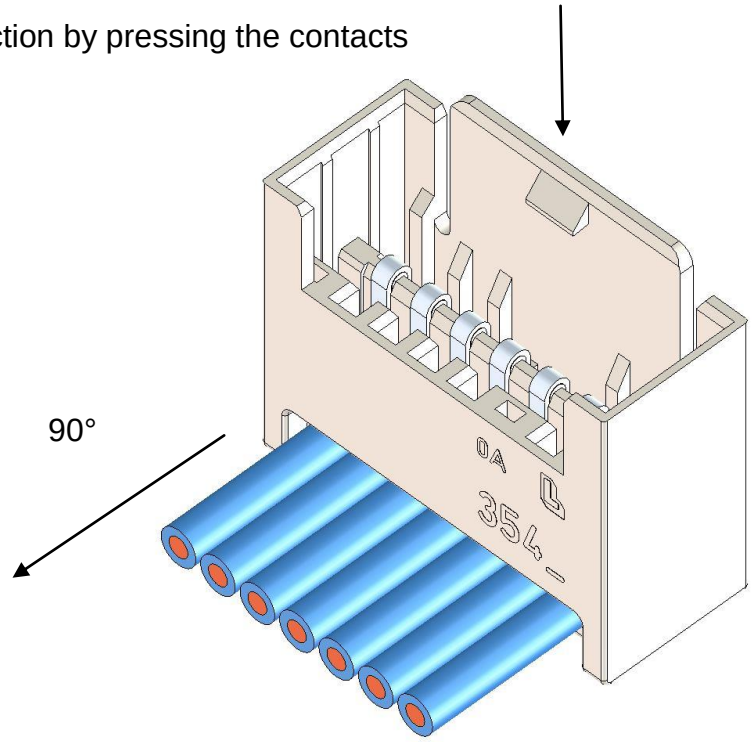

Connector according to RAST 2.5

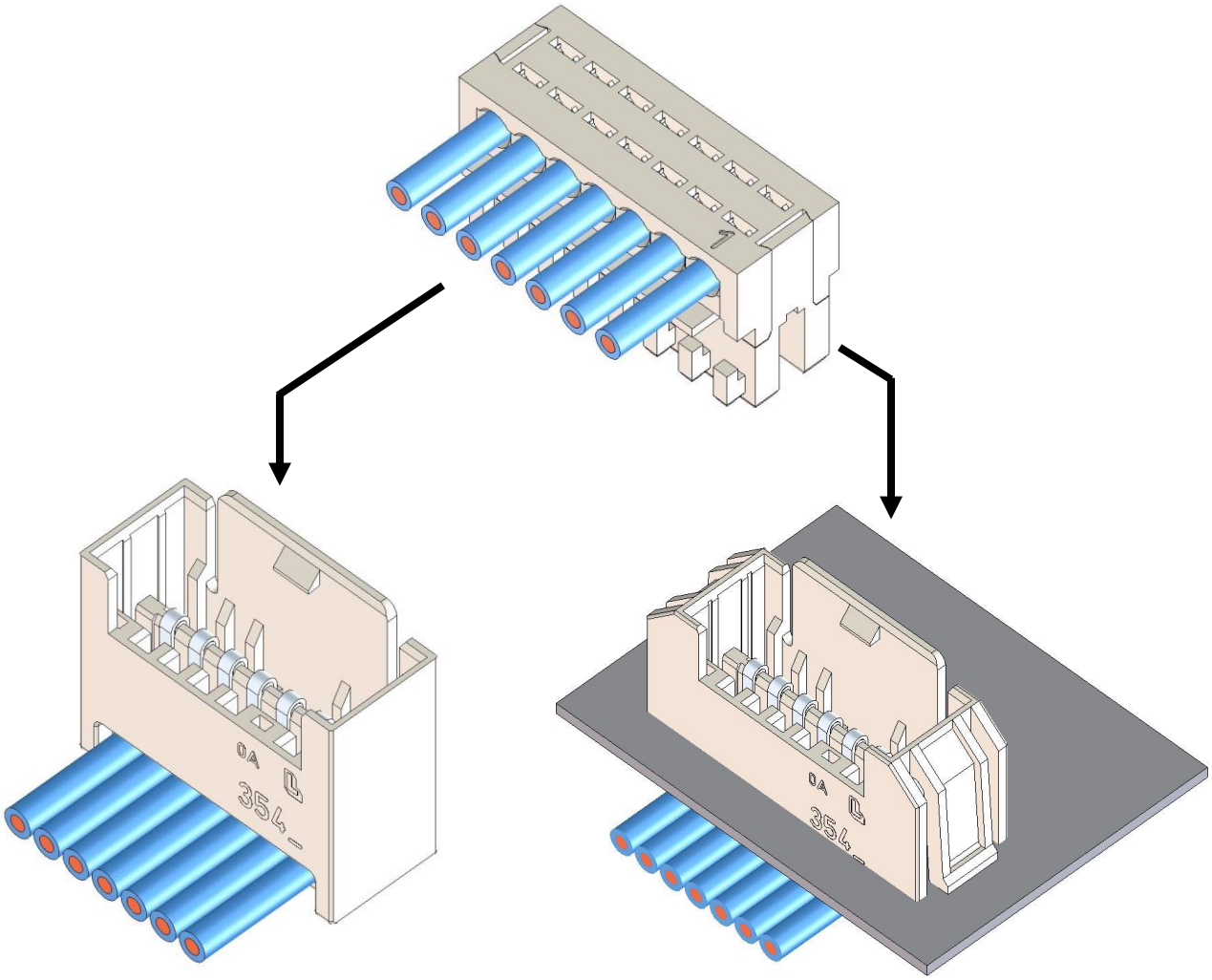

Pin header

Chassis pin header

2. Contact principle

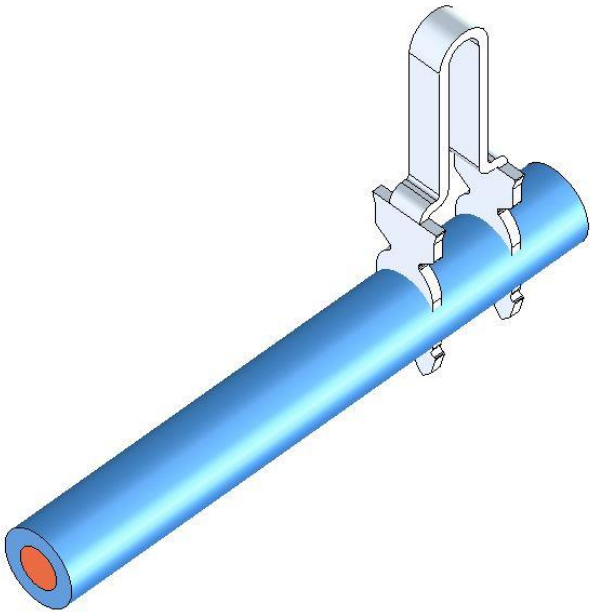

Insulation displacement connection
(test according to DIN EN 60352-4 / IEC 60352-4)

3. Application tooling and machines

The function, safety and quality of the connectors are only guaranteed by using of Lumberg processing equipment. It has to be taken into account that the connectors aren't checked electrically before the processing / assembling. Because of that an electrical test should be carried out after processing / assembling.

The user is solely responsible for other processing systems that have not been manufactured by Lumberg.

In case of using any lubricants or sliding agents in the feed and press areas residues (impurities) must not come into contact with the connectors.

Manual processing tool - Manual crimping tool

For fitting single wires and ribbon cables. For single and small series.

Manual processing device - Knuckle-joint press

For fitting single wires and ribbon cables. For small series.

Pneumatic processing device - Press with pneumatic cylinder

Pneumatically assisted processing device with manual cable feed and connector feed. For small and middle series.

Semi-automatic processing device

For cost-effective assembly of automatically supplied connectors, with inspection of samples and cable end positions before pressing with manual cable feed; designed for series-level manufacturing.

Automatic processing device

For cost-effective assembly of large manufacturing series with automatic cable feed for specific cable set configurations, with automatic connector feed and with continuity test and cable end position test; also with further options such as cutting coding, high voltage test or bending of the cable outlet direction.

4. Cable specificationn

The cable specifications must be kept. Any deviation must be discussed and approved by Lumberg.

4.1 Cable specification cross section for connection 0,2… 0,22 mm²

Technical data sheet 902 01 flat cable =	0,09 mm²
Technical data sheet 901 02 flat cable =	0,09 mm²
Technical data sheet 901 04 flat cable =	0,135 mm²

4.2 Cable specification cross section for connection 0,38 mm²

Technical data sheet 908 14 PVC - stranded wire =	0,38 mm²

4.3 Cable specification cross section for connection 0,50 mm²

Technical data sheet 908 15 PVC - stranded wire =	0,50 mm²

Other approved cable see Lumberg release list in the internet at www.lumberg.com

5. Assembly

The cables are mated with the contact equipped connection.

5.1 Pin header feed

Depending on the kind of delivery the pin header feed is as follows:

- to the hand press

The as bulk material delivered pin headers are put in the hand press by hand.

- to the machine

The as bar stock carrier of transparent PVC delivered pin headers are fed to the termination machine.

5.2 Cutting clearance

Wire cross section for connection (conductor) and insulation displacement area (ID slots) have to correspond. Only released cables are to be used for the ID slots.

5.3 Termination head

Termination head according to Lumberg specification.
In order to guarantee a correct positioning of the contacts and not to damage the bodies during the termination of the contacts, termination head, contact and connector have to correspond. The termination heads are part of the application machines. Termination head must be free from lubricants.

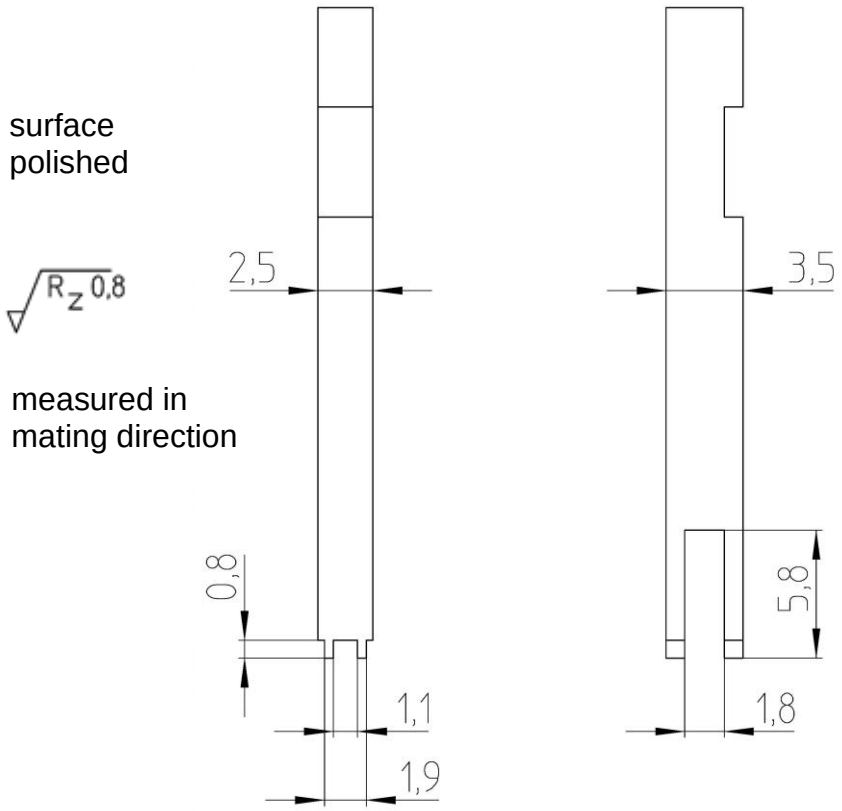

5.4 Shut height dimension of the termination machine and contact pins

An essential feature for the function of the pin header is the contact pin height after the termination. This is determined by the shut height dimension at the termination head. Depending on the used pin header and cable an adjustment of the shut height dimension could be required in order to keep the contact pin height.

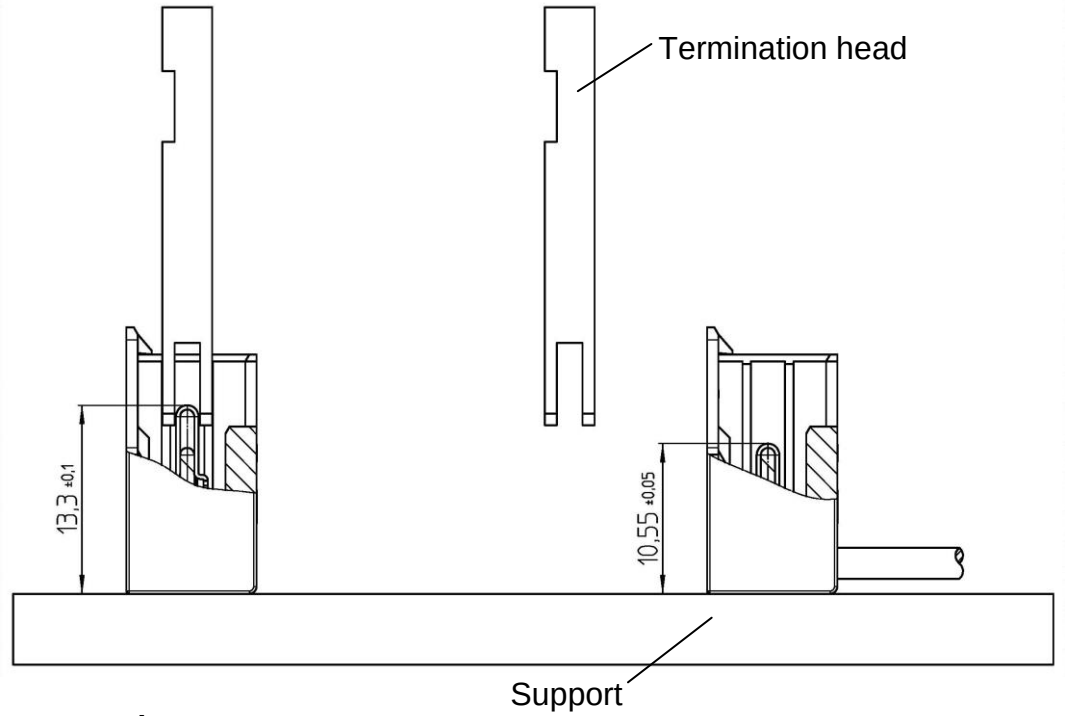

5.5 Cable protrusion

There must be the correct cable protrusion to guarantee good wire termination in the ID slots. After termination the cable protrusion must be visually checked.

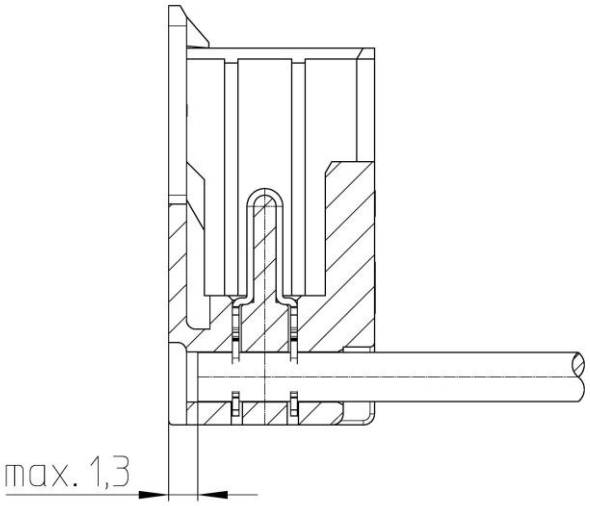

5.6 Cable

No damaged insulation of the cable in direction wire exit is allowed (visual check).
The ends of the cable must be cut off without burr and deformity

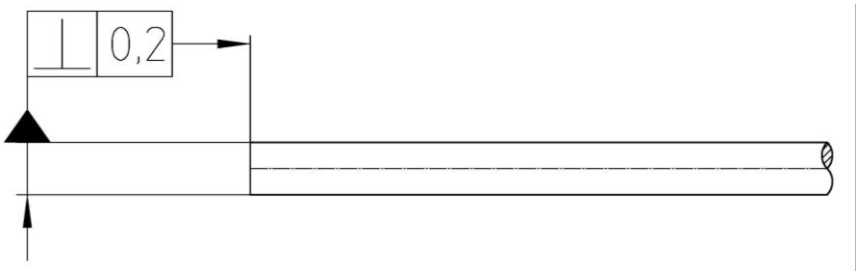

Flat cables must be punched out.

5.7 Housing

After the termination no visual damages of the housing are allowed (visual check). The mating function must be guaranteed (functional check). The contact must be in correct position in the housing (visual check). The contact insertion height must be kept (dimensional inspection).

6. Coding according to RAST 2.5

Basic plug in mating direction

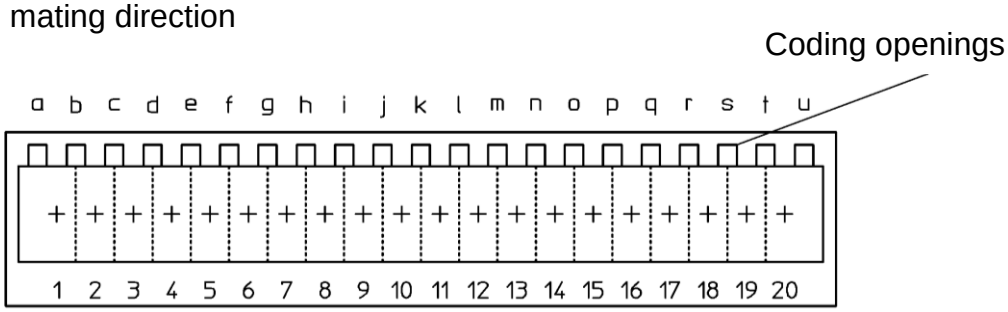

7. Quality assurance

For all working and processing steps and alterations (e. g. product launch, changes of the cable, changes of the tool or machine ...), which can affect the product quality, the responsible departments have to take care for appropriate quality assurance steps.

7.1 Quality features

The following quality features must be taken into consideration:

7.2 Quality features / IDC

- Width of the ID slot (insulation displacement terminal)
- Symmetry of the ID slot (insulation displacement terminal)
- Cable quality
- Contact insertion depth
- Cable protrusion

7.3 Width of the ID slot

Lumberg guarantees correct ID slot.

7.4 Symmetry of the ID slot

The Symmetry of ID slot and cable tolerance ±0,1 mm, is guaranteed by the body.

7.5 Cable quality

The cable must meet Lumberg specification acc. to point 4.1. Customized cables, which are listed in the release lists, have to correspond with the available specification sheets. Only Lumberg released cables are to be used. The customer bears full responsibility for the correct mating when cables are used which are not listed in the release lists.

The user must ensure that all approved wires are delivered in an adequate quality. The wire cross-section, concentricity, micro Shore hardness and the termination (lay) length should all be checked.

7.6 Contact insertion depth

The cable insertion depth must be kept, it determines the position of the conductors in the ID slot area. All single conductors must be in the ID slot area.

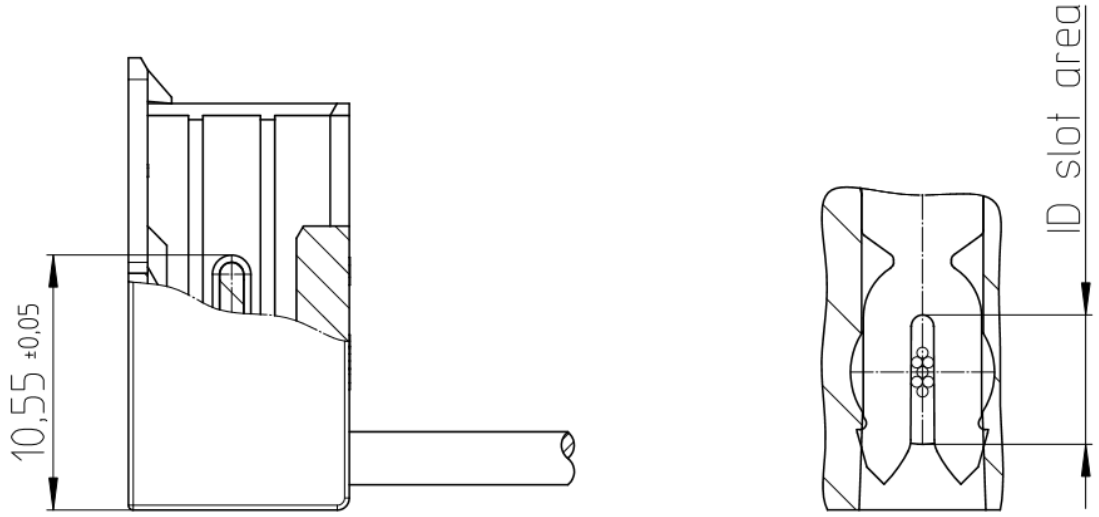

7.7 Cable protrusion

The cable protrusion according to point 5.5 must be kept. A protrusion of the cable in the housing leads to an incorrect mating.

7.8 Retention force of the wire

Minimal retention force of the wire:

PVC –stranded wire: 0,38 mm² > 50 N

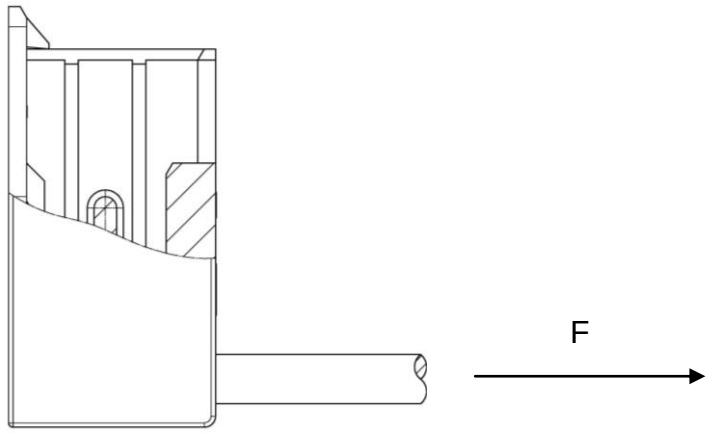

The stated value for the conductor's pull-out force is the typical value established during a test carried out with a standard 0,38mm² line. All values were determined under laboratory conditions and serve as a reference.

8. Storage

Tin-plated and silver-plated surfaces can undergo a physical aging process that may negatively affect their ability to be soldered. In order to maintain the best connection characteristics, make sure that the following instructions are closely followed during additional processing steps:

Storage conditions:
The parts should ideally be stored in the original packaging, at a constant temperature of 21-25°C, with a relative humidity of no more than 55%. The components should not be exposed to direct light. They should also be protected from any extreme ambient conditions (such as air pollution).

The storage time should be kept as short as possible, especially for silver-plated components and for solder connections in general. Our experience is that tin-plated components can be soldered for about a year after delivery when using the proper conventional flux. Silver-plated components, owing to their physical characteristics, should be processed within about six months of delivery.

These specifications are based on experience using components stored under optimal conditions. They do not constitute a binding commitment for the fulfillment of any characteristics.

Ask Lumberg for more information about alternative packaging options for other temperatures and environmental conditions.