# 3723



## Alteration Description

| Edition | Alteration carried out |
|---|---|
| | |
| | |
| | |
| | |
| | |
| | |
| | |
| | |
| | |
| | |
| | |
| | |
| | |
| | |
| | |
| | |
| | |
| | |
| | |
| | |
| | |
| | |
| | |
| | |

## Contents

**1. Product description....4**
1.1. Product types....4
Connector 3723 01....4
**2. System features....5**
**3. Contact principle....6**
3.1. Indirect mating on the contacts....6
**4. Cutting-off coding keys....7**
4.1. Cutting blades....7
**5. Application tooling and machines....8**
**6. Wire specification....8**
6.1. Wire specifications cross section for connection AWG 14....8
**7. Assembly....9**
7.1. Connector feed....9
7.2. Termination head....10
7.3. Setting dimension of the termination machine....10
7.4. Wire end position....12
7.5. Wire....12
7.6. Housing....13
**8. Quality assurance....14**
8.1. Quality features / IDC....14
8.2. ID slot width....14
8.3. Symmetry of the ID slot....14
8.4. Wire quality....14
8.5. wire insertion depth....15
8.6. Retention force of the wire....15
**9. Terms of storage....16**

## 1. Product description

### 1.1. Product types

### Connector 3723 01

Connector for indirect mating in ID technology, with exterior locking, consecutive placement without loss of pitch.

pitch 7,5 mm
acc. to data sheet 3723 01

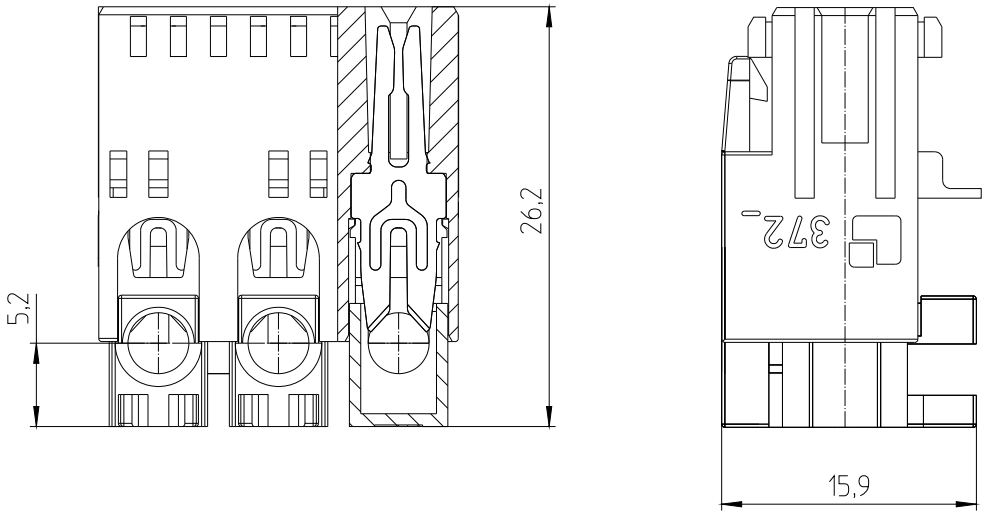

## 2. System features

Two part body
Supplied in following stacks

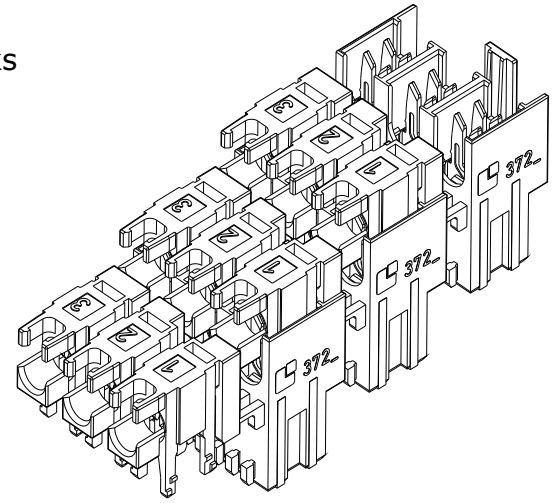


Wire termination

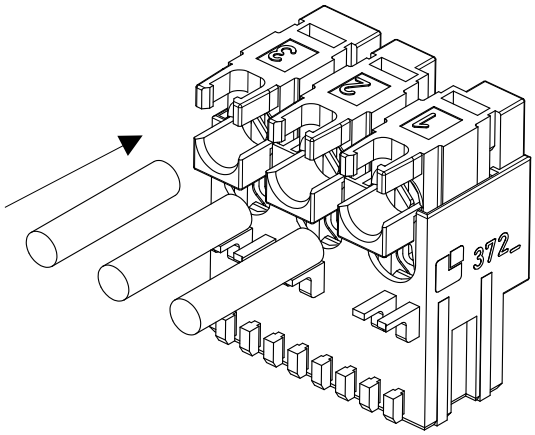


Insulation displacement connection by pressing the top
Wire exit 90° and 180°

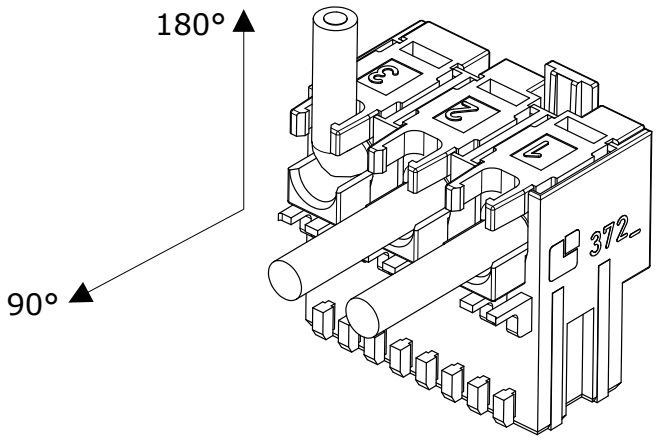

## 3. Contact principle

### 3.1. Indirect mating on the contacts

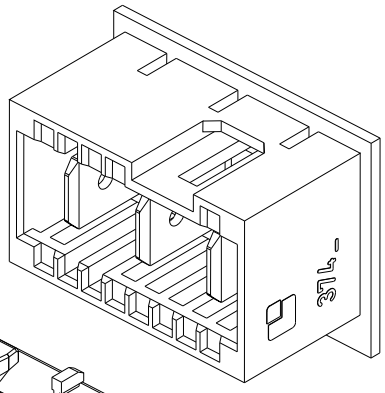

tab header
3741

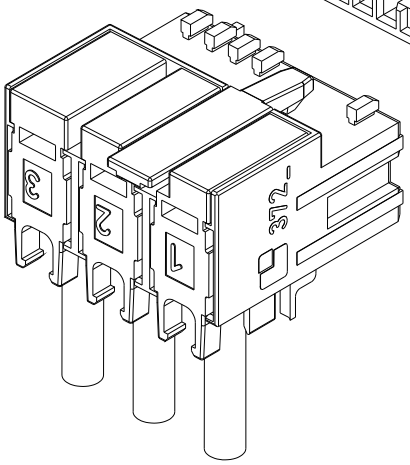

connector
insulation displacement
connection

flat tab acc. DIN 46244
4,8 x 0,8 mm and
6,3 x 0,8 mm

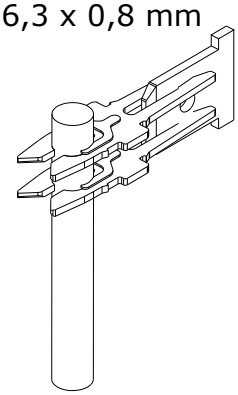

insulation displacement
connection acc. to
DIN EN 60352-4 /IEC60352-4

## 4. Cutting-off coding keys

Connectors can be supplied to the machine as basic types with all coding keys in place.
The machine can cut off the keys in any selected position.
It is the responsibility of the customer to make a correct arrangement of the connectors, coding device and colour.

**Caution !**
Connectors, tab headers and guide frames are always shown in mating direction.

Connector basic type

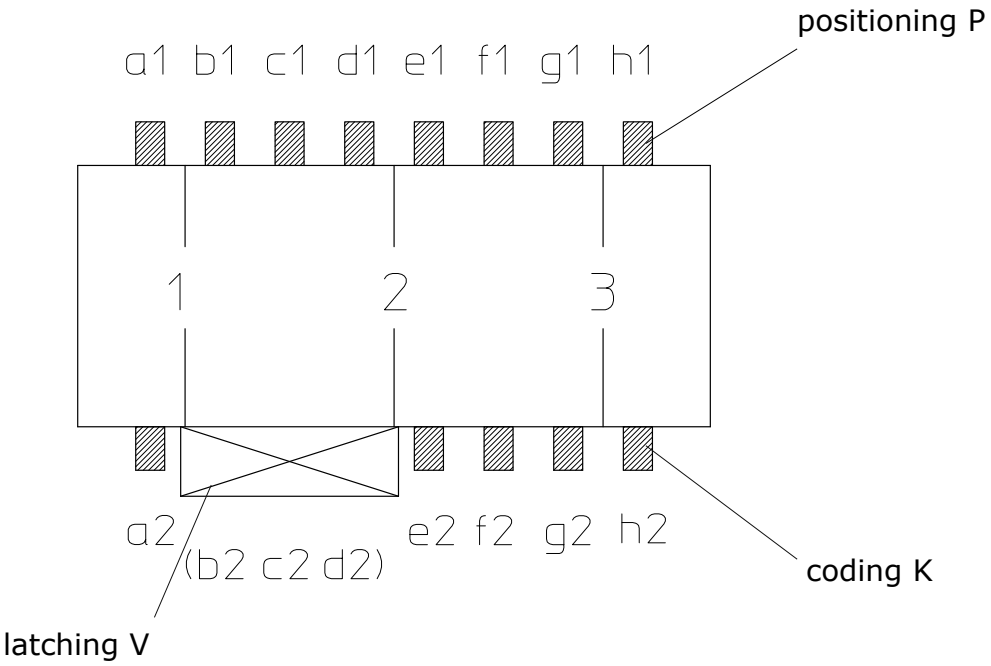


### 4.1. Cutting blades

To ensure a correct cutting-off of the coding keys, use only Lumberg cutting blades.
A minimal remaining burr is permitted.

## 5. Application tooling and machines

The function, safety and quality of the connectors are only guaranteed by using of Lumberg processing equipment. It has to be taken into account that the connectors aren't checked electrically before the processing / assembling. Because of that an electrical test should be carried out after processing / assembling.

The user bears full responsibility if any other processing equipment is used.

In case of using any lubricants or sliding agents in the feed and press areas residues (impurities) must not come into contact with the connectors.

**Manual processing device**
For assembling connectors designed for small series production.

## 6. Wire specification

The wire specification must be kept. Any deviation must be discussed and approved by Lumberg.

### 6.1. Wire specifications cross section for connection AWG 14

Technical data sheet 908 67 = 2,5 mm²

Other approved wire see Lumberg release list in the internet at www.lumberg.com

## 7. Assembly

Connector and cross section should be adapted with each other acc. Lumberg specification (see technical data sheet).

### 7.1. Connector feed

The lower housing must be cut off before the first stack of connectors is fed into the termination head. To feed a new stack into the machine the upper housing of the stack in the machine must be placed into the lower housing of the new stack. The cutting-off of the single connector from the stack is done by the machine. The links will remain on the connector. The connection of links typically remain on the connector in this case.

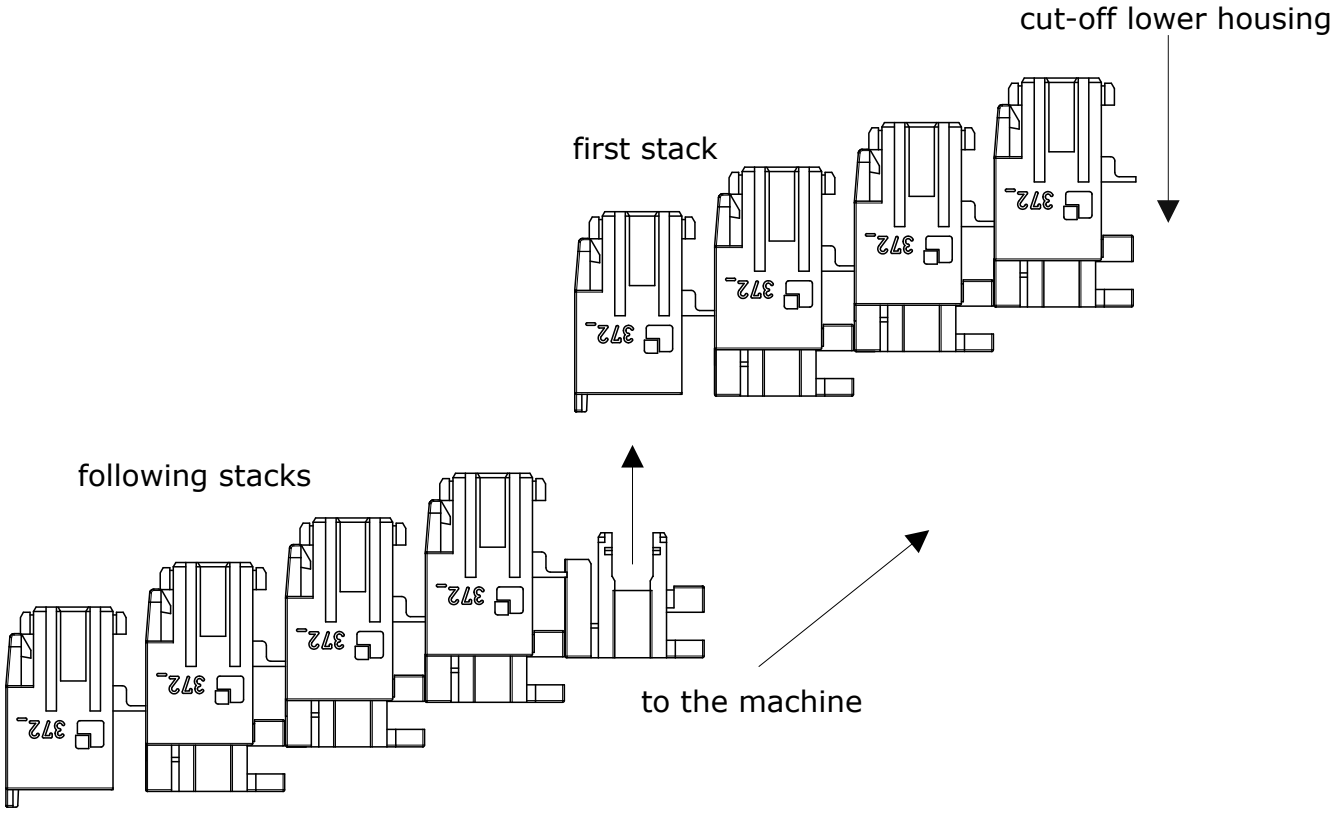

## 7.2. Termination head

The connector will be terminated by using a flat termination head. The termination head must be parallel to the base and also the connector must be perpendicular to the base.

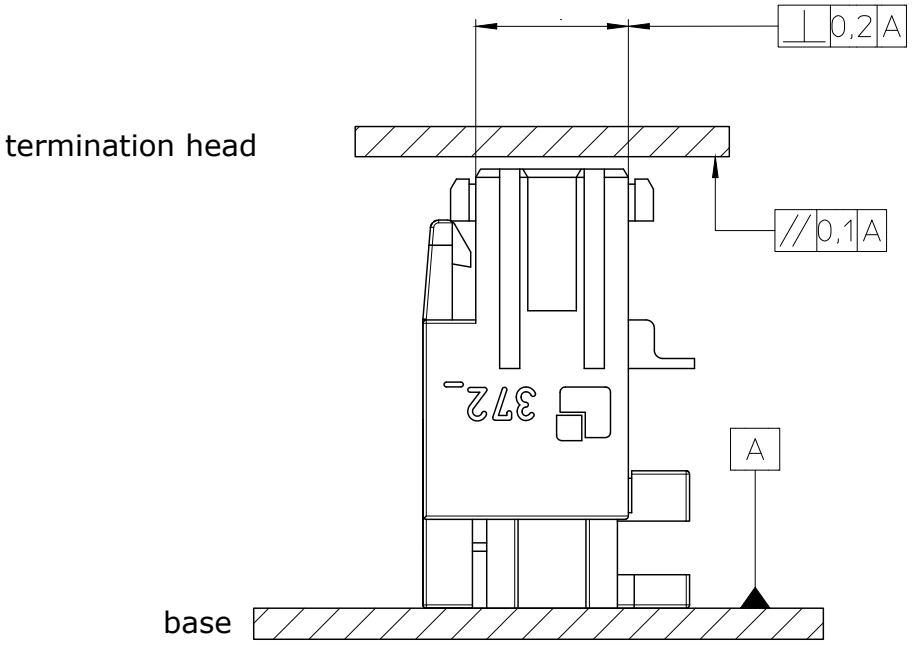


## 7.3. Setting dimension of the termination machine

An important feature for the function of the connector is the connector height, measured after assembling. The shut height is determined by the setting dimension of the termination machine.

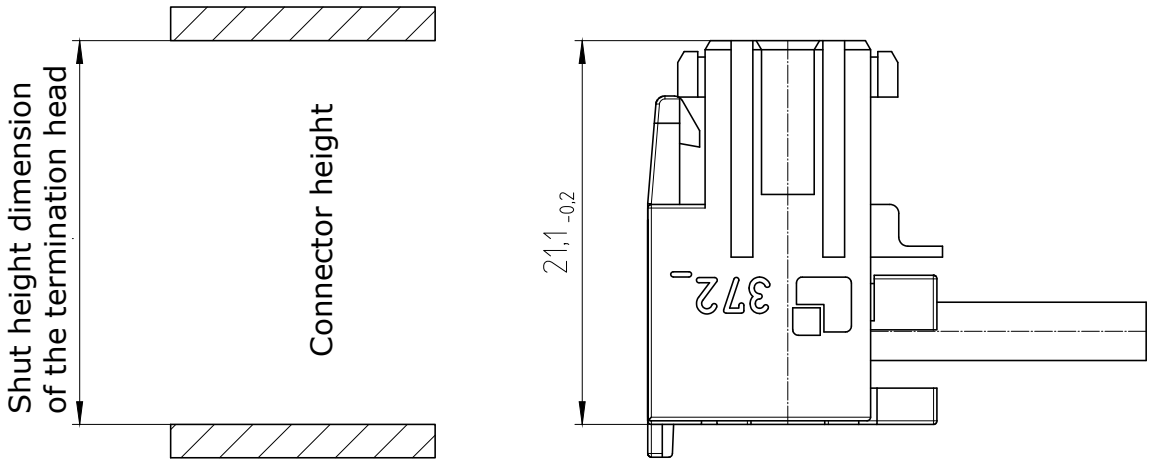

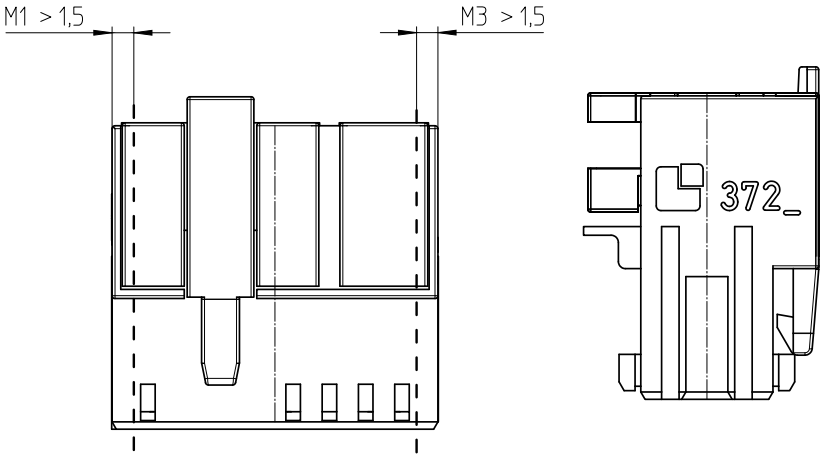


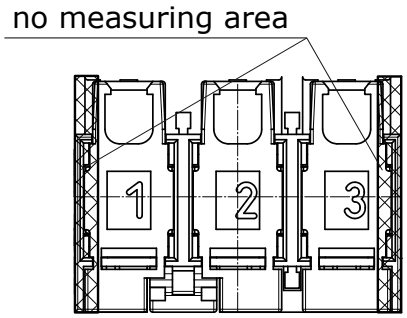


The shut height has to be measured on both sides and in the center area.
If a depth gauge is used for measuring, the connector must lay flat with its mating face downwards. A measuring tip of at least Ø 3 mm is required. Make sure that the measurement is not distorted by a protruding dovetail guide, pole number marking or similar.

## 7.4. Wire end position

There must be the correct wire protrusion to guarantee good wire termination in both ID slots of the contact. After termination the wire protrusion must be visually checked.

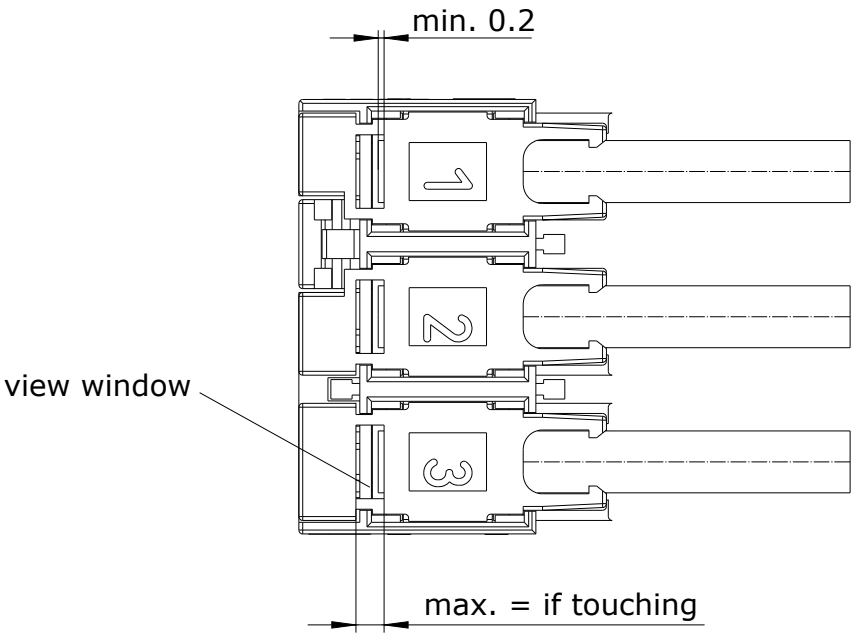


## 7.5. Wire

The wires must be cut off without burr and deformity.

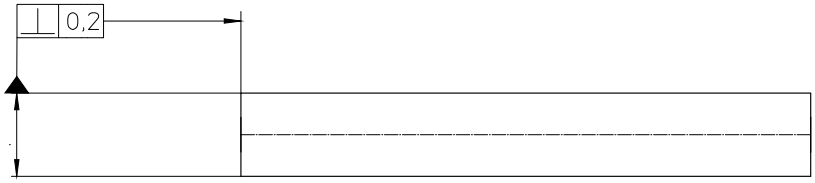


No cuts in the insulation are allowed in wire exit direction (visual check).
Insulation cuts are permitted between the ID slots of the contact.

## 7.6. Housing

After termination no visual damages of the housing are allowed (visual check).
The terminated connector must mate with the male header (functional test).
The contacts must be in correct position in the housing (visual check).

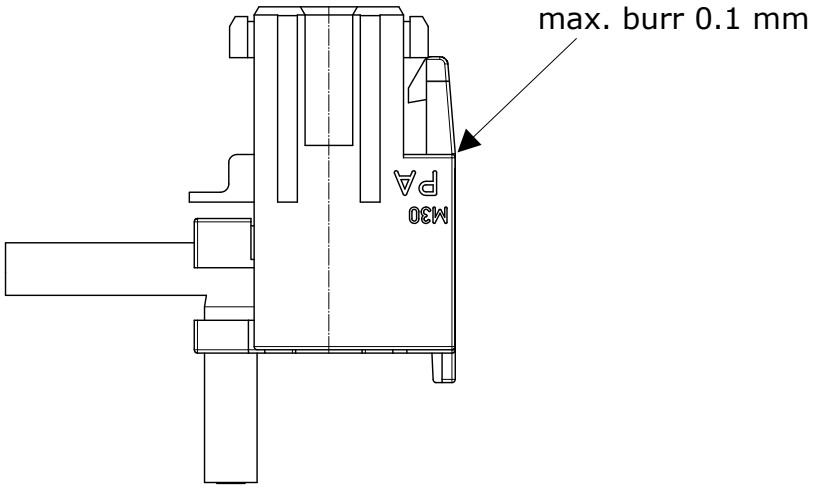

## 8. Quality assurance

For all working and processing steps and alterations (e.g. product launch, changes of the wire, changes of the tool or machine …), which may affect the product quality, the responsible departments have to take care for appropriate quality assurance steps.

### 8.1. Quality features / IDC

The following quality features must be taken into consideration:

- ID slot width
- Symmetry of the ID slot
- Wire quality
- Conductor insertion depth
- Wire protrusion

### 8.2. ID slot width

Lumberg guarantees correct ID slot.

### 8.3. Symmetry of the ID slot

Symmetry of the ID slot, tolerance ±0.1 mm, is guaranteed by the body.

### 8.4. Wire quality

The wire must meet Lumberg specification acc. to point 6.1.
Customized wires, which are listed in the release lists, have to correspond with the available data sheets.
Only Lumberg released wires have to be used. The customer bears full responsibility for the correct mating when wires are used which are not listed in the release lists.

The user must ensure that all approved wires are delivered in an adequate quality. The wire cross-section, concentricity, micro Shore hardness and the termination (lay) length should all be checked.

## 8.5. wire insertion depth

The wire insertion depth is determined by the height of the body. All single conductors must be in the ID slot area.

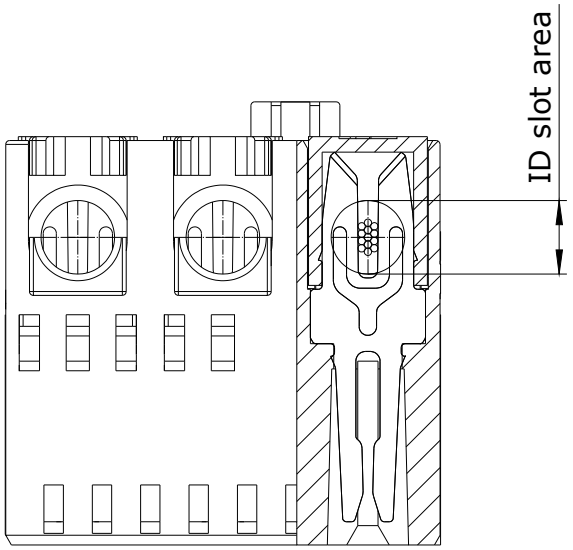


## 8.6. Retention force of the wire

Minimum retention force of the wire out of the insulation displacement contact:

PVC - stranded wire: ~ 2,5 mm² > 250 N

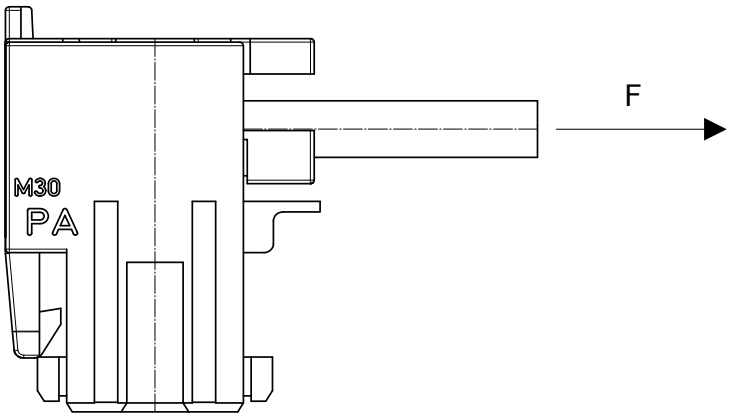


The stated value for the wire pull-out force is a typical value, established during a test with a standard 2,5 mm² wire. All values were determined under laboratory conditions and serve as a reference.

## 9. Terms of storage

The general terms and conditions of storage are available on the internet under Downloads at www.lumberg.com. The specified terms of storage must be complied with.